INSTALLATION, OPERATION AND MAINTENANCE INSTRUCTIONS FOR THE SERIES

1200SR2 series

Duff-Norton Europe

Sommaire

1 Safety Instructions P.4

2 Instructions for the Environment P.9

3 Storage P.10

4 Installation P.10

5 Operation P.11

6 Maintenance P.12

7 Possible malfunctions P.13

1 Security

The purpose of this chapter is to provide you with all the necessary information to ensure maximum safety during storage, handling and operation of **Duff-Norton Europe** rotary unions.

Therefore, these operating instructions are an essential complement to the **Duff-Norton Europe** rotary union in your possession.

Duff-Norton Europe can not be held responsible for any damage, if all the recommendations defined in this operating instructions have not been followed.

Duff-Norton Europe informs the operator of the rotating fitting of its obligation to ensure that its staff received this notice.

Dangerous situation that could result in death or serious bodily injury.

This can damage the rotary connector or surrounding equipment.

Useful information

Duff-Norton Europe's 1200SR2 series rotary unions in carbon steel with chemical nickel treatment are referenced with the suffix "K". For the rest of this manual, these rotary connectors will be called "K-Models".

Duff-Norton Europe's 1200SR2 series rotary unions in 316L stainless steel are referenced with the suffix "I". For the rest of this manual, these rotary connectors will be referred to as "I models".

1.1 Operating Conditions for **1200SR2 Series** Rotary Unions

The tables below describe the most commonly used **Duff-Norton Europe 1200SR2 Series** rotary union applications. For any specific use other than the one described in the table below, please consult us in order to obtain our written agreement of use.

Rotary unions « K models » :

Model	Operating temperature	Speed	Fluids					
			Water	Air	Hydraulic oil	Steam	(Natural) Gas	Other fluids
1213SR2K	from 5°F to + 392°F	from 0 to 15RPM	X	X	X	X	X	Consult us
1217SR2K	from 5°F to + 392°F	from 0 to 15RPM	X	X	X	X	X	Consult us
1221SR2K	from 5°F to + 392°F	from 0 to 15RPM	X	X	X	X	X	Consult us
1227SR2K	from 5°F to + 392°F	from 0 to 15RPM	X	X	X	X	X	Consult us
1234SR2K	from 5°F to + 392°F	from 0 to 15RPM	X	X	X	X	X	Consult us
1242SR2K	from 5°F to + 392°F	from 0 to 10RPM	X	X	X	X	X	Consult us
1249SR2K	from 5°F to + 392°F	from 0 to 10RPM	X	X	X	X	X	Consult us

Rotary unions « I models » :

Model	Operating temperature	Speed	Fluids					
			Water	Air	Hydraulic oil	Steam	(Natural) Gas	Other fluids
1213SR2I	from 5°F to + 392°F	from 0 to 15RPM	X	X	X	X	X	Consult us
1217SR2I	from 5°F to + 392°F	from 0 to 15RPM	X	X	X	X	X	Consult us
1221SR2I	from 5°F to + 392°F	from 0 to 15RPM	X	X	X	X	X	Consult us
1227SR2I	from 5°F to + 392°F	from 0 to 15RPM	X	X	X	X	X	Consult us
1234SR2I	from 5°F to + 392°F	from 0 to 15RPM	X	X	X	X	X	Consult us
1242SR2I	from 5°F to + 392°F	from 0 to 10RPM	X	X	X	X	X	Consult us
1249SR2I	from 5°F to + 392°F	from 0 to 10RPM	X	X	X	X	X	Consult us

To convey oxygen, the rotary coupling must be made of 316L stainless steel and degreased, which means all components must be cleaned and free of grease before using the rotary union.

1.2 Applications prohibited with the use of the **1200SR2 series** rotary unions **Duff-Norton Europe.**

This section informs you about misapplications known to date for the use of the **1200SR2 series** rotary of **Duff-Norton Europe**.

- **FOODSTUFFS**

  Duff-Norton Europe 1200SR2 series rotary unions cannot be used on food equipment.

- **HIGH PRESSURE EQUIPEMENT**

  Duff-Norton Europe 1200SR2 Series rotary unions can be used on high pressure installations. The maximum permissible pressure for **1200SR2 series** is 350 bar. The table below shows the maximum permissible pressures for each model.

Model	Max. Permissible pressure (bar)
1213SR2K	350
1213SR2I	175
1217SR2K	350
1217SR2I	175
1221SR2K	300
1221SR2I	150
1227SR2K	300
1227SR2I	150
1234SR2K	250
1234SR2I	125
1242SR2K	250
1242SR2I	125
1249SR2K	200
1249SR2I	100

- **EQUIPMENT WITH FIXED CONNECTIONS**

  Duff-Norton Europe 1200SR2 series rotary unions can not be used on installations with fixed (rigid) connections. A rotary union must be mounted without axial and / or radial load. Therefore, it is essential to connect one of the connections by means of a flexible hose (refer to the Installation section).

- **EQUIPMENT CONVEYING FLUIDS AT HIGH TEMPERATURE**

  Duff-Norton Europe Series 1200SR2 rotary unions cannot be used on high temperature fluids. The operating range is from 5 ° F to + 392 ° F.

- **ATEX EQUIPMENT**

  Duff-Norton Europe rotary unions do not have ATEX certification. As a result, **Duff-Norton Europe** cannot be held liable for the use of a **Duff-Norton Europe** rotary union in explosive atmospheres.

1.3 Safety instructions

RISK OF BURNS

Depending on the application, more or less hot fluids can be conveyed. The steel design of **Duff-Norton Europe** rotary unions does not prevent heat transfer. **Duff-Norton Europe** rotary unions can therefore be more or less burning (depending on the temperature of the fluid being conveyed), leading to serious injuries. It is therefore important for the operator to ensure that proper protective gloves are used by his staff when handling the rotary union after operation.

In the case of high rotational speeds and low throughput on the medium, the rotary seal can generate high operating temperatures, which can cause severe burns in the event of contact with the skin.

Duff-Norton Europe recommends to the operator, in the case of medium- and high-temperature fluids transfer, to shield the rotary union as much as possible from contact with the surrounding personnel. In the same way; **Duff-Norton Europe** recommends placing a sign or poster on the risk of burning.

FLUID USED

Depending on the fluid being transferred, the materials used in the rotary seal of the **Duff-Norton Europe** rotary union may not be compatible with the fluid being conveyed **Duff-Norton Europe**'s standard sealing rotary seal is composed of PTFE and FPM. **Duff-Norton Europe** therefore recommends that the operator verify the compatibility of the **Duff-Norton Europe** rotary seal and the fluid carried. If required, **Duff-Norton Europe** can validate and / or determine the compatible materials of the rotary seal as a function of the fluid being conveyed. **Duff-Norton Europe** can not be held liable for the incompatibility of the rotary seal and the fluid carried if no written request for compatibility has been requested.

1.3 Safety instructions [continued]

FLEXIBLE HOSES

As with the rotary seal, the operator must ensure compatibility between the materials used for the flexible pipes and the fluid. An incompatibility between the hoses and the transferred fluid can cause porosity and / or bursting of the hoses. **Duff-Norton Europe** recommends that the operator verify at least the following parameters for hoses :

- Compatibility with the fluid,
- Compatibility with the fluid pressure,
- Current regulations.

Duff-Norton Europe shall not be held liable for damage and / or injury caused in the event that one or more hoses rupture or become porous.

INCORRECT INSTALLATION OF THE ROTARY UNION DUFF-NORTON EUROPE

If the installation of the **Duff-Norton Europe** rotary union has not been done properly, leakage may occur. Depending on the fluid being conveyed, these leaks can cause injury or damage to surrounding equipment. **Duff-Norton Europe** rotary coupling can also cause seizure of the Duff-Norton Europe rotary coupling, which can cause severe damage to the equipment, as well as the risk of severe injury (pulling out a hose).

2 Instructions for the preservation of the Environment

The primary function of a **Duff-Norton Europe** rotary union is to transfer fluid from a fixed part to a rotating part. Therefore, depending on the fluid being transferred, precautions must be taken to protect the environment in order to avoid pollution. Nevertheless, a rotary union has wear parts, such as the rotary seal, which if not replaced regularly can cause leakage and consequently potential pollution. This section provides information on the recommendations to be put in place in.

2.1 Transfer of liquids

In the case of liquid transfer, **Duff-Norton Europe** recommends that the operator provide a leakage receptacle positioned below the rotary union to collect all potential leaks. **Duff-Norton Europe** rotary unions are equipped with drain holes. Duff-Norton Europe then recommends that the operator connect these drainage holes and collect any leaks.

Duff-Norton Europe also recommends that there be no fluid, pressure or residual pressure in the circuits where the rotary union is to be installed. This recommendation is also valid before any operation of uninstalling the rotary union of the machine.

If the rotary union of the machine is uninstalled, the rotary union may still contain fluid after disassembly. Operation will therefore ensure that the rotary union is completely drained and the residual fluid is properly collected before any transport and / or manipulation of the rotary union.

2.2 Gas Transfer

In the case of gas transfer, **Duff-Norton Europe** recommends that the operator provide a leakage receptacle positioned around the rotary union to collect all potential leaks. **Duff-Norton Europe** rotary union are equipped with drain holes. **Duff-Norton Europe** rope then recommends that the operator connect these drainage holes and collect any leaks.

Duff-Norton Europe also recommends that there be no gas, no discharge pressure or residual pressure in the circuits where the rotary union is to be installed. This recommendation is also valid before any operation of uninstalling the rotary union of the machine.

3 Storage of Rotary Unions
Duff-Norton Europe

All **Duff-Norton Europe** rotary unions are supplied in individual, identified cardboard packages. **Duff-Norton Europe** recommends that its rotary unions be stored in their original packaging in a dry place at a temperature between 68 and 86 ° F.

Apart from the "I" models for oxygen applications, all **Duff-Norton Europe** rotary unions are lubricated as standard. Over time, it is possible that the rotary seals will stick to the rotor. This phenomenon is quite normal. Simply rotor "gumming" before rotating the rotary union by rotating it. Depending on the diameter of the rotors, this release may require more or less torque. The table below gives information on the starting torques of the various dimensions of **Duff-Norton Europe 1200SR2 series**.

Model	1213SR2	1217SR2	1221SR2	1227SR2	1234SR2	1242SR2	1249SR2
Torque (daN/m)	0,02	0,04	0,08	0,12	0,15	0,19	0,20

4 Installation of rotary unions
Duff-Norton Europe

In order to correctly install the **Duff-Norton Europe** rotary union, please follow the instructions below in chronological order :

➢ **Step 1**
Visually inspect all connections of the rotary union, as well as those of the equipment where the rotary union is installed.

➢ **Step 2**
Clean all sealing surfaces with a dry cloth.

➢ **Step 3**
Connect the flexible hose to the rotating union of **Duff-Norton Europe.**

➢ **Step 4**
Connect the hose to the **Duff-Norton Europe** rotary union.

➢ **Step 5**
Check that there is no stiffness, torsion or pinching on the hose after connection.

➢ **Step 6**
Pressurize the **Duff-Norton Europe** rotary union.

➢ **Step 7**
Check for leaks.

5 Operation of the rotary union Duff-Norton Europe

Duff-Norton Europe 1200SR2 Series rotary connectors can be operated without fluid flow. Nevertheless, in this case, the rotary seal will wear prematurely.

In the normal operation of the **Duff-Norton Europe** rotary union, no leakage should be detected.

Duff-Norton Europe 1200SR2 series rotary unions are threaded. As a result, it is quite normal to observe an off-centering of the rotary union when it is rotated. Therefore, the hose must be sufficiently flexible to absorb this eccentricity and not to generate any axial or radial load on the **Duff-Norton Europe** rotary union.

Rotary Union Thread Size (inch)	Hose Size and Length (in.x mm)	Dimensions (mm)	
		A	B
3/8''	3/8'' x 250	38	250
1/2''	1/2'' x 250	38	250
3/4''	3/4''x 300	54	300
1''	1'' x 381	70	381
1''1/4	1''1/4 x 458	83	458
1''1/2	1''1/2 x 458	93	458
2''	2'' x 534	127	534
2''1/2	2''1/2 x 560	180	560
3''	3''x 610	210	610
4''	4''x 712	280	712
5''	5'' x 762	280	762
6''	6'' x 839	420	839
8''	8'' x 915	547	915

The correct way to install the hose on a rotary union

CAUTION
A straight hose, when fully charged, becomes rigid as solid pipe. This rigidity, plus the added weight of the fluid media and expansion due to temperature, can drastically shorten the service life of the Rotary Union.

6 Maintenance of the rotary union Duff-Norton Europe

6.1 Instructions for disassembling the rotary union Duff-Norton Europe

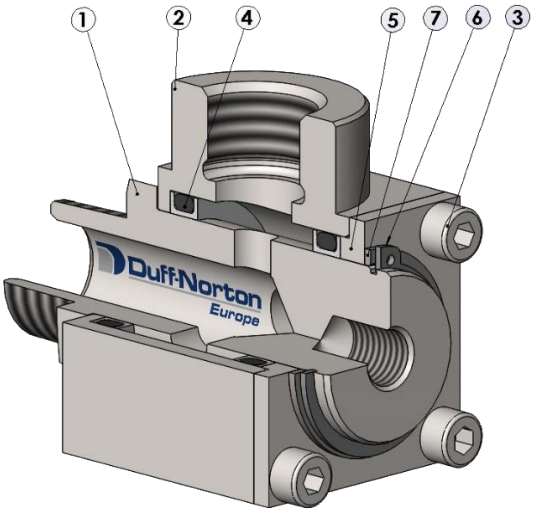

- Remove the circlip Mark 6,
- Remove the reference Washer 7,
- Extract the stator 1 rotor locator Mark 2,
- Unscrew the 4 guide screws 3.
- Remove the marker bearing 5
- Remove the rotary gasket Mark 4 from the Stator 2 using a hook.

6.2 Rotary union Maintenance Instructions Duff-Norton Europe

- The rotor marker 1 shall be considered to be replaced if:
  - The rotor may have undergone wear, it will be considered good, up to a rib less than 0.2 mm from the nominal diameter of the gasket. In addition, it is necessary to change this part, in case of need, to polish the range of fittings (without axial displacements) to the Sandpaper grains 600.
- For K models The grease used is the Red Belleville ®red.
- For models I The grease used is the Belleville Nutrol ®(white) food.
- Duff Norton Europe recommends a filtration of 10 µm for a better lifespan of the rotary union.
- The installation of the rotary unions must be done without additional stress on the rotary union : This implies the use of flexible hoses.
- The rotary union should never be used as a rotational bearing.

6.3 Instructions for reassembling the rotary union Duff-Norton Europe

- For reassembling, clean all parts and check them visually.
- Place the first rotary seal marker 4 in the stator 2.
- Lubricate the rotor Mark 1.
- Insert the reference rotor 1 into the stator 2.
- Place the second trim marker 4.
- Place the marker bearing 5.
- Screw the screws TCHC marker 3.
- Place the washer Mark 7.
- Place the Circlip Mark 6.
- Make a pressure test in order to ensure that no leakage remains.

7 Possible malfunctions of the rotary union Duff-Norton Europe

ROTARY UNION NOT SEALED AFTER INSTALLATION

- POOR INSTALLATION
  Switch off equipment. Make sure the various connections are tight. Make sure that all hoses are free of tension (pinching, twisting). Make sure all sealing surfaces are clean.

- ROTATING SEAL DAMAGED
  Pack the Duff Norton rotary union and return it to **Duff-Norton Europe**.

- ROTARY UNION DEFECTIVE
  Pack the Duff Norton rotary union and return it to **Duff-Norton Europe**.

THE ROTARY UNION HAS PREMATURE WEAR

- THE FLUID CONVEYED IS POLLUTED
  Replace the fluid in the circuit, taking care to clean all components in the circuit, and then replace the rotary union.

- THE APPLICATION IS NOT COMPATIBLE WITH THE ROTARY UNION **Duff-Norton Europe**
  Contact Duff-Norton Europe to ensure the compatibility of the **Duff-Norton Europe** rotary union and the application.

THE ROTARY UNION VIBRATES

- THE ROTARY UNION IS INCORRECTLY CONNECTED TO THE EQUPMENT
  Tighten the connections of the rotary union.

Duff-Norton Europe
45, route Nationale - 02310 Romeny-sur-Marne - FRANCE
Tél. 33 (0) 3 23 70 70 00 - Fax 33 (0) 3 23 70 70 10
Email : duff-france@duffnorton.fr
http://www.duffnorton.fr